Gravitron® 2000 AT Owner's Manual

StairMaster®

Printed in the United States. © 1994 StairMaster ®
Sports/Medical Products, Inc. All rights reserved.

Corporate Headquarters
12421 Willows Road N.E., Suite 100
Kirkland, WA 98034

(800) 635-2936
(206) 823-1825
Fax (206) 823-9490

P/N 21225-B

© 1994 StairMaster Sports/Medical Products, Inc./StairMaster, StairMaster, & Gravitron are registered trademarks and 2000 AT and the Gravitron logo are trademarks of StairMaster Sports/Medical Products, Inc.

WARRANTY

This is to certify that the StairMaster® Gravitron® 2000 AT™ upper-body exercise system is warranted by StairMaster Sports/Medical Products Inc. to be free of all defects in materials and workmanship. This warranty does not apply to any defect caused by negligence, misuse, accident, alteration, improper maintenance, or an "act of God." This warranty is nontransferable from the original owner.

If, within three years from date of purchase, any part of the StairMaster Gravitron 2000 AT upper-body exercise system should fail to operate properly (except for the knee pad, the trolley wheels, the pulley and the cable—all of which have a one-year warranty), contact the Customer Service Department of StairMaster Sports/Medical Products, Inc. to report the problem. International customers may contact their local distributor. When calling, please be prepared to provide our customer service representative with the following information:

- Your name, shipping address, and telephone number;
- The model number of the inoperable unit;
- The serial number of the inoperable unit (located on the frame);
- The date(s) of purchase for the inoperable unit(s);
- Your billing address.

This information will enable StairMaster Sports/Medical Products, Inc. to ensure that you are the only one ordering parts under your warranty protection. If warranty replacement parts are shipped to you, StairMaster Sports/Medical Products, Inc. may require that the inoperable part be returned. To facilitate this process, the following policy has been established:

- Please call the Customer Service Department of StairMaster Sports/Medical Products, Inc. to receive a return goods authorization prior to shipment.
- StairMaster Sports/Medical Products, Inc. will incur all freight (i.e., shipping and handling) charges for warranty parts ordered for a product that is less than 45 days old. The parts will be shipped to you via an overnight courier*.
- The customer is responsible for freight charges on warranty parts for products that are more than 45 days old. Customers will not be responsible for the return shipment of the inoperable parts (see below).
- Some inoperable warranty parts must be promptly returned to the Customer Service Department of StairMaster Sports/Medical Products, Inc. The freight charges for the return of inoperable warranty parts will be paid by StairMaster Sports/Medical Products, Inc.—detailed instructions are included with each warranty replacement part shipment.

StairMaster Sports/Medical Products, Inc. neither makes, assumes, nor authorizes any representative or other person to make or assume for us, any other warranties whatsoever, whether expressed or implied, in connection with the sale, service, or shipment of our products. We reserve the right to make changes and improvements in our products without incurring any obligation to similarly alter products previously purchased. In order to maintain your product warranty and to ensure the safe and efficient operation of your StairMaster Gravitron 2000 AT upper-body exercise system, only authorized replacement parts can be used. This warranty is void if any parts other than those provided by StairMaster Sports/Medical Products, Inc. are used.

* Note: Aerosol products cannot be transported via air.

INTRODUCTION

The StairMaster® Gravitron® 2000 AT™ upper-body exercise system is a highly effective tool for developing and strengthening your upper body muscles. It is designed for use by individuals of practically all ages and fitness levels. Your purchase of this machine is a positive affirmation of your commitment to use the best available method to develop a high level of muscular fitness. In order to achieve the greatest gains possible from your machine, you should read this manual thoroughly and adhere closely to the instructions.

WHAT IS IN THIS MANUAL?

Following the information on installation and a brief explanation of how the Gravitron 2000 AT upper-body exercise system works, this manual contains two major sections. The first section provides an explanation of how the machine should be used to achieve maximum results. The second section offers instructions and advice on how to properly maintain your machine. The “Appendix” section contains additional information for the owner.

WHAT IS THE STAIRMASTER GRAVITRON 2000 AT UPPER-BODY EXERCISE SYSTEM?

The Gravitron 2000 AT upper-body exercise system is a machine designed for performing lift-assisted pull-up, chin-up, and bar dip exercises. The 180 pound weight stack, divided by 10 pound increments, provides a wide range of assistance levels. The exclusive linear tracking mechanism eliminates the joint stress associated with systems that use a pivotal mechanism.

Regular use of the Gravitron 2000 AT upper-body exercise system develops and strengthens the major muscle groups of the upper body, including the: biceps, brachialis, brachioradialis, deltoid, triceps, pectoralis major and minor, latissimus dorsi, rhomboids, teres major, and trapezius.

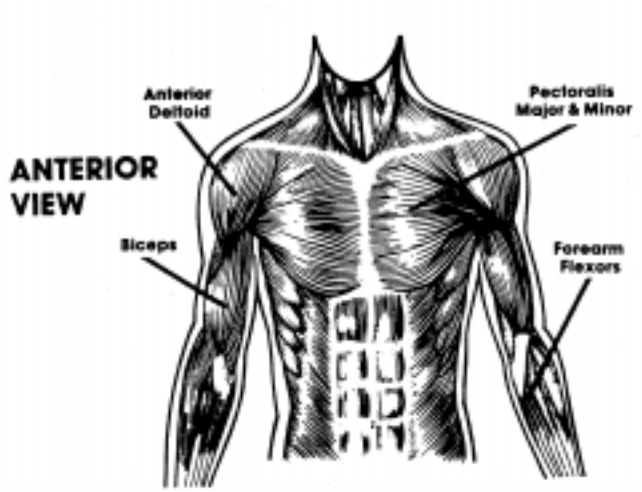

Figure 1: Muscles of the Front of the Upper Body

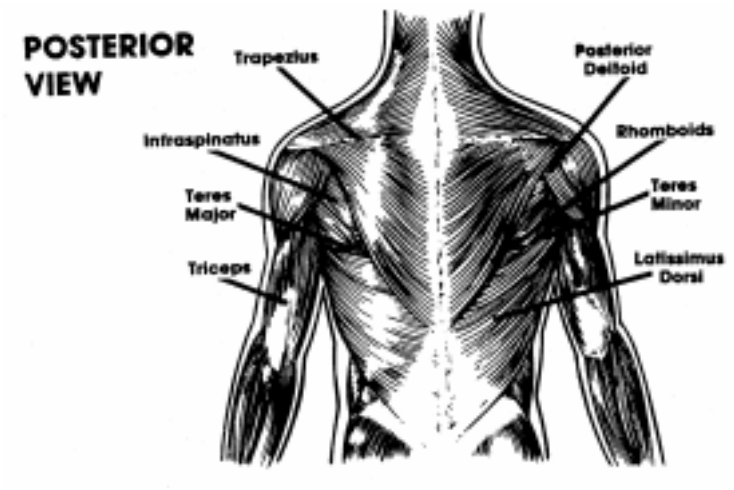

Figure 2: Muscles of the Back of the Upper Body

CONTENTS

SAFETY GUIDELINES **1**

INSTALLATION INSTRUCTIONS **3**

BASIC OPERATING INSTRUCTIONS **5**
- General Guidelines for Safe Operation 5
- Your First Workout 6
- The Lift Assistance Matrix 10
- Training Tips 11
- Advanced Conditioning Program 11

MAINTENANCE **13**
- Helpful Hints 13
- Tool List 13
- Initial Service 13
- Preventive Maintenance 13

TROUBLESHOOTING **16**

PARTS REMOVAL AND REPLACEMENT **18**
- Cable Assembly 20
- Chin-up Bar 18
- Dip Bar 18
- Dip Bar Bellows 19
- Knee Pad 19
- Pulley Assembly 20
- Safety Panel 18
- Stub Frame 18
- Trolley Assembly 19
- Trolley Wheel Assembly 19
- Weight Plate 21
- Weight Stack Guide Rod 21
- Weight Stack Selector Rod 21

APPENDICES **23**
- How to Order Parts 24
- Metric Lift Assistance Matrix 25
- Figures 5 - 9 26
- Key to Figures 5 - 9 31

CONTENTS

LIST OF TABLES

Table 1: Dimensions 3
Table 2: Lift Assistance Matrix 10
Table 3: Basic and Advanced Workout Sequences 12
Table 4: Preventive Maintenance Schedule 15

LIST OF ILLUSTRATIONS:

Figure 1: Muscles of the Front of the Upper Body vi
Figure 2: Muscles of the Back of the Upper Body vi
Figure 3: Starting Position 7
Figure 4: Grip Positions 9
Figure 5: Front View of the Machine 26
Figure 6: Right Side View of the Machine 27
Figure 7: Trolley Assembly 28
Figure 8: Weight Stack Assembly 29
Figure 9: Guide Rod Assembly 30

IMPORTANT SAFETY INSTRUCTIONS

GUIDELINES FOR SAFELY OPERATING THE STAIRMASTER® GRAVITRON® 2000 AT™ UPPER-BODY EXERCISE SYSTEM

When using any exercise equipment, several basic precautionary guidelines should always be strictly enforced. Among the safety precautions to which you should adhere when operating the Gravitron 2000 AT upper-body exercise system are the following:

1. Read all instructions thoroughly before using the Gravitron 2000 AT upper-body exercise system.

WARNING

2. To reduce the risk of injury to individuals:

   - Closely supervise the Gravitron 2000 AT upper-body exercise system whenever it is used by, or near children, invalids, or disabled persons. Keep children away from the weight stack and trolley assembly while the machine is in use. A serious injury could result from an infant's or a small child's fascination with the moving components of the exercise system.

   - Use the Gravitron 2000 AT upper-body exercise system only for its intended use as described in this *Manual*. Do not use attachments or accessories that are not genuine products provided by StairMaster Sports/Medical Products, Inc.

   - Never attempt any adjustments or repairs while an exercise program is in progress.

   - Do not use the machine outdoors.

- Never operate the Gravitron 2000 AT upper-body exercise system if the machine does not appear to be operating properly or if it has been dropped or damaged. Call the Customer Service Department of StairMaster Sports/ Medical Products, Inc. at (800) 331-3578 to arrange for damaged parts to be returned to our manufacturing facility for examination and repair. International customers may contact their local distributor; refer to the *Appendix* for the appropriate phone number. Do not attempt to use the equipment until all problems have been corrected.

3. Failure to follow all guidelines may compromise the effectiveness of the exercise experience, expose yourself (and possibly others) to injury and reduce the longevity of the machine.

SAVE THESE INSTRUCTIONS

Before leaving the manufacturing facility in Tulsa, Oklahoma, your StairMaster® Gravitron® 2000 AT™ upper-body exercise system was thoroughly inspected and tested for proper operation. To minimize shipping damage, careful attention was given to making your machine ready for shipment. The machine must be placed on a solid, level surface of at least 10 square feet (0.9 square meters). A minimum ceiling height of 8 feet (2.4 meters) and a doorway width of 27.5 inches (70 cm) is required. Make sure there is enough room on the right side of the machine to allow access to the weight stack.

The dimensions of the machine are listed in Table 1. Throughout this *Manual*, all references to the left or right side and to the front or back are made as if you were on the machine ready to exercise. For example, the weight stack is on the right side of the machine.

Table 1. Dimensions

Height	81.0 inches (206 cm)
Depth	50.0 inches (127 cm)
Width	48.5 inches (123 cm)
Shipping Width	27.5 inches (70 cm)
Weight	511 pounds (232 kg)

Each Gravitron 2000 AT upper-body exercise system requires minor assembly. Before moving the machine, make sure enough people are availabe to move it safely. Take into account the weight of the machine and the fact that the center of gravity is located towards the base. Once the machine is in the desired location, perform the following steps to make it operational:

1. Cut the nylon straps securing the weight stack.

2. For shipping purposes, the chin-up bars were turned inward and installed on opposite sides of the machine. To rotate the bars:

   - Remove the clear shrink wrap from the bars.
   - Support the right bar at the upwardly curved end with one hand. Use the other hand to push out the detent pin from the other end of the bar. Rocking the bar up and down will ease pin removal.
   - Pull the bar out of the frame and place it on the floor on the right side of the machine.
   - Repeat the two previous steps for the left bar, but place it on the floor on the right side of the machine.

INSTALLATION INSTRUCTIONS

- Pick up the bar on the right side of the machine and install it into the right side frame hole. Gently push the bar into the frame until it makes contact.
- Make sure the hand grip of the bar is pointing to the right and downward. Line up the holes in the bar with the holes in the frame and install the detent pin.
- Repeat the steps for the bar on the left side of the machine.

3. Remove the wooden blocks that secure the weight stack guide rods—these blocks are used only on machines shipped internationally.

4. Your StairMaster® Gravitron® 2000 AT™ upper-body exercise system is now ready for use.

The chin-up bars should be removed before moving the machine. Removing the bars minimizes the chances of any potential damage to either the area or any adjacent equipment. Remove the detent pins and pull the bars out of the frame. Once the move is complete, insert the bars into the frame holes until they contact the back of the frame. Line up the holes in the bar with the holes in the frame and insert the detent pin.

GENERAL GUIDELINES FOR SAFE OPERATION

WARNING

THESE GUIDELINES ARE DIRECTED TO YOU, AS THE OWNER OF THE MACHINE.
YOU SHOULD INSIST THAT ALL USERS FOLLOW THE SAME GUIDELINES.
YOU SHOULD MAKE THIS MANUAL AVAILABLE TO ALL USERS.

1. Obtain a complete physical examination from your medical doctor and enlist a health/fitness professional's aid in developing an exercise program suitable for your current health status.

2. Keep your hands and feet away from all moving parts. Of course, you must be on the knee pad (which moves) to perform the exercises.

3. When using the Gravitron® 2000 AT™ upper-body exercise system for the first time, exercise at the higher levels of user assistance until you feel comfortable and capable of receiving less lift assistance.

4. As a general rule, all repetitions of the exercises should be performed at a moderate rate of speed. Your actual speed and the duration of your exercise, however, should always be subject to how you feel. Apparent heart rate or any other external influence should never override your judgment when exercising.

5. Overweight or severely deconditioned individuals should be particularly cautious when using the machine for the first time. Even though such individuals may not have prior histories of serious physical problems, they may perceive the exercise to be far less intense than it really is, resulting in the possibility of overexertion or injury.

6. Although all equipment and machines manufactured by StairMaster® Sports/Medical Products, Inc. have been thoroughly inspected at the manufacturing facility prior to shipment, proper installation and regular maintenance are required to ensure safety. Maintenance is the sole responsibility of the owner.

BASIC OPERATING INSTRUCTIONS

YOUR FIRST WORKOUT ON THE STAIRMASTER® GRAVITRON® 2000 AT™ UPPER-BODY EXERCISE SYSTEM

WARNING

IF AT ANY TIME DURING YOUR WORKOUT YOU FEEL CHEST PAIN, EXPERIENCE SEVERE MUSCULAR DISCOMFORT, FEEL FAINT, OR ARE SHORT OF BREATH, STOP EXERCISING IMMEDIATELY. IF THE CONDITION PERSISTS, YOU SHOULD CONSULT YOUR MEDICAL DOCTOR IMMEDIATELY.

1. Warm-up with light calisthenics and easy stretching for approximately five minutes before exercising on the Gravitron 2000 AT upper-body exercise system.

2. Place the weight stack pin in the appropriate plate. For the first workout, women should lift 20-25% of their body weight; men should lift 50-55%. Refer to the lift assistance matrix in the next section for details.

3. Grasp the dip bars.

4. Step onto the assistance steps.

5. Assume a kneeling position—one leg at a time—on the knee pad.

6. Keep your arms in an elbows-locked position.

7. Support your weight on your hands. This is the starting position.

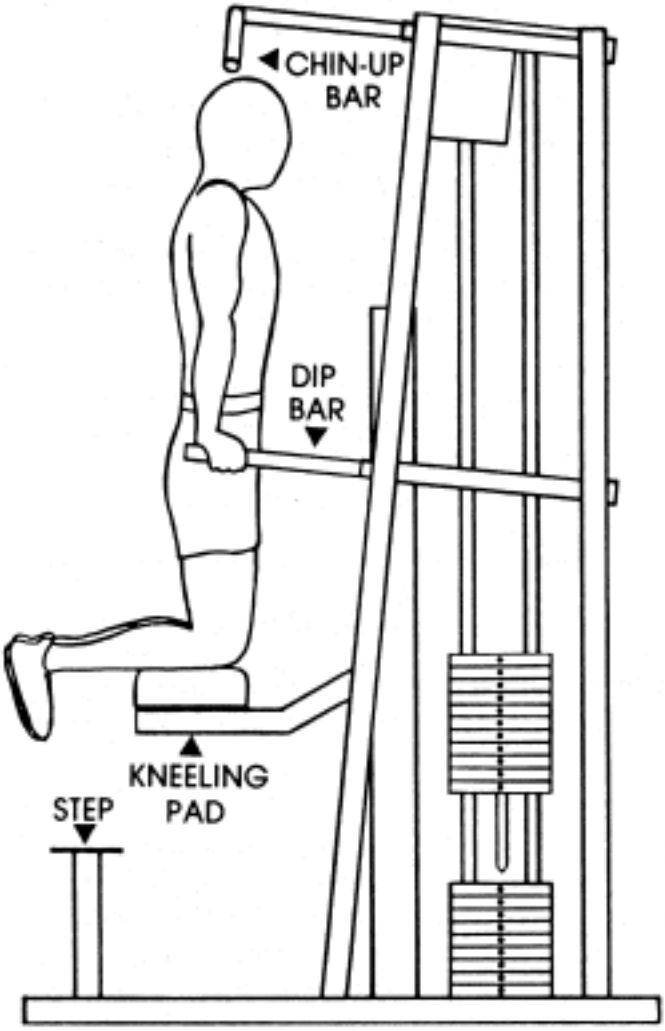

Figure 3: Starting Position

8. The basic exercise routine alternates one set of bar dips (dips) with one of three different sets of pull-ups/chin-ups, for a total of six sets. From the starting position, proceed through the following steps:

   a. Lower your body until your elbows form right angles. Then, push your body upward back to the starting position, until your arms are straight.

      Remember:
      - Keep your back straight during the exercise.
      - Perform the movements relatively slowly.
      - Make your muscles do the work in both directions.

      A complete execution of a single repetition (**rep**) should take about three to four seconds. Repeat the movement nine more times for a total of ten reps of the dip exercise. Ten reps equals one **set**.

      You may take a brief rest after each set. With your weight supported on your hands, step off the knee pad with one leg and place that foot on the assistance step while carefully letting the knee pad return to the fully up position; do not let the weights slam down.

WARNING

TO REDUCE THE RISK OF INJURY, DO NOT STEP OFF THE KNEE PAD WITH BOTH LEGS UNTIL THE WEIGHT STACK HAS BEEN RETURNED TO THE RESTING POSITION.

      You may step off the knee pad with the other leg.

   b. Return to the starting position. Reach up, one hand at a time, and grasp the wide grips of the chin-up bar. Use a pull-up grip; keep your palms facing away from you during the exercise. Pull your body up until your chin is higher than your hands; then lower your body until your arms are straight. One rep should take about three to four seconds. Repeat nine more times for a total of ten reps. Take a rest at the end of the set, if necessary.

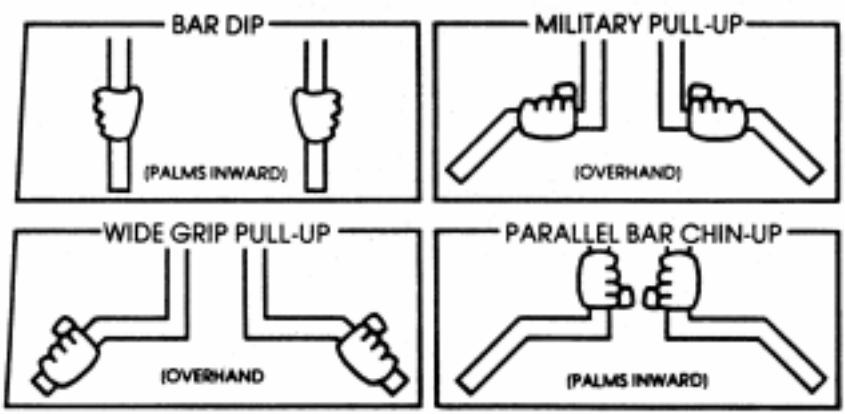

Figure 4: Grip Positions

c. Return to the starting position. Perform another ten-rep set of dips. Rest, if necessary.

d. Return to the starting position. Reach up and grasp the center portion of the chin-up bars. You may use a chin-up grip (palms toward you) or a pull-up grip (palms facing away from you). Perform a ten-rep set of military grip pull-ups/ chin-ups. Rest, if necessary.

e. Return to the starting position. Perform another ten-rep set of dips. Rest, if necessary.

f. Return to the starting position. Reach up and grasp the parallel pull-up bars with your palms facing each other. Perform a ten-rep set of parallel bar chin-ups.

g. When you have completed this last set, step off the knee pad onto the assistance steps.

9. This completes a basic workout program. If you properly performed all 60 repetitions of the recommended exercises and kept the rest period between sets to a minimum, your total workout should have taken about five minutes.

BASIC OPERATING INSTRUCTIONS

THE LIFT ASSISTANCE MATRIX

The percentage of your body weight you are lifting while exercising can be determined with the Lift Assistance Matrix. To use the matrix, intersect your body weight (to the nearest 10 pounds) with the amount of weight selected on the weight stack.

Table 2: Lift Assistance Matrix

BODY WEIGHT (LBS)

ASSISTANCE LEVEL	120	130	140	150	160	170	180	190	200
20	83	85	86	87	88	88	89	89	90
30	75	77	79	80	81	82	83	84	85
40	67	69	71	73	75	76	78	79	80
50	58	62	64	67	69	71	72	74	75
60	50	54	57	60	63	65	67	68	70
70	42	46	50	53	56	59	61	63	65
80	33	38	43	47	50	53	56	58	60
90	25	31	36	40	44	47	50	53	55
100	17	23	29	33	38	41	44	47	50
110	8	15	21	27	31	35	39	42	45
120		8	14	20	25	29	33	37	40
130			7	13	19	24	28	32	35
140				7	13	17	22	26	30
150					6	12	17	21	25
160						6	11	16	20
170							6	11	15
180								5	10

NOTE: It is not possible to perform the exercise at a level of assistance equal or greater than your body weight.

TRAINING TIPS

In order to ensure that your training efforts are as safe and productive as possible, you should adhere to the following training guidelines:

1. Perform all exercises in a controlled manner.

2. Perform all exercises through a full range of motion; go all the way down and all the way up (but do not let the weights touch).

3. Perform three sets of both dips and pull-ups (chin-ups) each workout.

4. Pull-ups and chin-ups use the same muscles—only at different angles. With all grip positions, hook your thumbs completely around the bar.

5. Alternate one set of dips with one set of pull-ups (chin-ups) and so on until your workout is completed.

6. Perform your workout with a minimum of rest between sets.

7. Exercise at a level of intensity (assistance) which challenges you. The tenth rep of each set should be the last one you could perform with the proper form.

8. Decrease the level of assistance when you can comfortably perform 10 reps in each set.

9. Exercise at least twice a week on non consecutive days.

10. Emphasize the lowering (eccentric) phase of the exercises.

11. Keep a written record of your performance to monitor your progress.

12. There are four ways to increase the intensity of your workout: a) perform more repetitions; b) perform more sets; c) use less assistance; d) take less rest between sets.

THE ADVANCED CONDITIONING PROGRAM

When you exercise regularly on the StairMaster® Gravitron® 2000 AT™ upper-body exercise system you will increase the endurance and strength of muscles in your upper body. In a relatively short period of time, you will discover that you can perform the basic exercise routine relatively easily. You should either increase the intensity of your

workout (refer to in the section, “Training Tips”) or develop an individualized program.

You have considerable freedom in planning your workout program, as long as you adhere to the principles in the section “Training Tips”. One option is to use an “advanced” protocol for training. The Basic and Advanced protocols are shown in Table 3.

1. Select the minimum amount of lift-assistance that allows 8 reps per set before muscle failure, while still allowing a full range of motion.

2. Exercise to fatigue. Do as many reps per set as possible. Rest for no more than one minute between sets. The entire program may require more than five minutes, even if you maintain the suggested pace of one rep every three to four seconds.

3. Adjust your intensity level, if necessary, prior to your next workout. If you have reached the point where you can consistently perform 12 reps of an exercise per set at a specific weight, you should decrease the amount of lift-assistance by 10 pounds.

Table 3. Basic and Advanced Workout Sequences

		Basic Workout	Advanced Workout
Set	**Exercise**	**Reps**	**Reps**
#1	**Bar Dip**	**10**	**8-12**
#2	**Military Pull-up**	**10**	**8-12**
#3	**Bar Dip**	**10**	**8-12**
#4	**Wide Grip Pull-up**	**10**	**8-12**
#5	**Bar Dip**	**10**	**8-12**
#6	**Parallel Bar Pull-up**	**10**	**8-12**
	Total	**60**	**48-72**

HELPFUL HINTS

The safety level given by the design of this equipment can only be maintained when the equipment is regularly examined for damage and wear. Inoperable components shall be replaced immediately or the equipment shall be put out of use until it is repaired. Read all maintenance instructions thoroughly before beginning work. In some cases, an assistant is required to perform the necessary tasks.

All references to the right or left side and to the front or back are made as if you were on the machine ready to exercise. For example, the weight stack is on the right side of the machine. The circled numbers in the figures identify parts that are referenced in the Parts Key of the Appendix.

TOOL LIST

The following tools are needed to perform service and maintenance:

- combination wrenches (sizes 3/8" - 3/4")
- adjustable wrench
- phillips screwdriver
- external snap ring pliers
- 5/16" allen wrench
- standard screwdriver
- rubber mallet
- shop goggles or other eye protection

INITIAL SERVICE

Upon receiving your machine, use a soft, clean towel to wipe off the dust that may have accumulated during shipping. Your machine will require minor assembly. Refer to the "Installation Instructions" section of this *Manual* for details.

PREVENTIVE MAINTENANCE

A schedule of the recommended preventive maintenance is shown in Table 4. This schedule assumes moderate to heavy usage in a commercial health club environment. Refer to the appropriate "Parts Removal and Replacement" section of this *Manual* for all disassembly and assembly instructions.

Daily

1. Clean the exterior of your machine, especially the knee pad, using soap and water or a diluted household cleaner such as Fantastic®. Do not use bleach as it may discolor some parts.

2. Check the cable housing for nicks and cuts and replace the cable if it is damaged.

3. Make sure the pulley turns freely.

4. Inspect the dip bars to ensure that they move up and down through the full range of movement.

5. Check the cable attachment points at both the weight stack and the trolley. Ensure the nyloc nut is securely fastened on the bolt.

Weekly

1. Thoroughly clean the entire machine at least once a week.

2. Inspect the exposed frame for any rust, bubbling, or paint chips during the weekly cleaning. The salt in perspiration can damage the unpainted surfaces. Repair the damaged area with a touch-up kit (refer to the Parts Key for the touch-up kit part number).

3. Wipe the weight stack guide rods with a rag dampened with window cleaner in order to clean off the old lubricant and prevent buildup. To lubricate the guide rods, spray silicon lubricant onto a clean rag and wipe the guide rods.

4. Clean the cable by wiping it with a rag dampened with window cleaner. Do not lubricate the cable.

WARNING

NEVER LUBRICATE THE SEALED BEARINGS ON THE PULLEY. THEY ARE PERMANENTLY LUBRICATED AND MAY FAIL IF YOU ADD LUBRICANTS

Table 4. Preventive Maintenance Schedule

PART	RECCOMENDED ACTION	FREQUENCY	CLEANER	LUBRICANT
Exterior/ Interior	Clean	Daily	Glass Cleaner	N/A
Kneeling Pad	Clean	Daily	Disinfectant	N/A
Cable	Visually inspect for nicks and cuts and replace if any are discovered	Daily	Glass Cleaner	N/A
Guide Rods	Clean and lubricate	Weekly	Glass Cleaner	Silicone Spray
Trolley Rollers	Clean and lubricate	Weekly	Glass Cleaner	Silicone spray
Cable Connection Points	Clean and lubricate	Weekly	Glass Cleaner	Multipurpose grease
Dip Bar Exercise Handles	Inspect for full range of motion	Daily	N/A	Multipurpose grease
Pulley	Inspect for free movemnet, wear	Daily	N/A	N/A

Note: Use of a silicone spray on parts not so specified will result in diminished performance and a shorter life span for that part.
N/A = Not Applicable

TROUBLESHOOTING

This section outlines several tests to systematically identify and isolate the cause of common problems. The first step is to identify the problem. Once you have identified the problem, perform the tests in exactly the same order as written. Refer to the appropriate "Parts Removal and Replacement" section of this *Manual* for all disassembly and assembly instructions. To order a replacement part, or to get help with the troubleshooting process, contact the Customer Service Department of StairMaster® Sports/Medical Products, Inc. at (800) 331-3578 (international customers should call (206) 823-1825).

Problem: The trolley does not move smoothly.

1. Check for and remove any obstruction on the inside of the trolley track. If the trolley track is clear, proceed to the next step.

2. Clean and lubricate the guide rods. Inspect the weight plates to ensure that no debris has built up in the guide rod holes. Clean the holes if necessary. If the trolley is still not smooth, proceed to the next step.

3. Support the trolley and disconnect the cable from the trolley. Manually raise and lower the trolley on its track. If it tracks smoothly, proceed to step #4. If the trolley is still does not move smoothly, proceed to the step #5.

4. Inspect the pulley. Verify that it spins freely by hand; check for and remove any obstructions between the pulley mounting plates. If the pulley is still not spinning freely, loosen the nut on the pulley mounting bolt slightly and try again. If the pulley still does not spin smoothly, the bearings are probably worn out and you must replace the pulley

5. Remove the trolley from its track. Clean all four trolley wheels and spin them by hand. They should spin freely. If not, replace the trolley wheel(s). Clean both sides of the track and lubricate the track with a silicone spray. Reassemble and retest the machine.

6. If the trolley is still sticking, contact the Customer Service Department of StairMaster Sports/Medical Products, Inc. for additional assistance.

Problem: More weight plates move than were selected, or some plates move and then fall down.

1. Make sure the selector pin is fully engaged in the weight stack.

2. Inspect the top and bottom of all weight plates for excess grease or sweat. This

condition may cause the plates to stick to each other. If such excess exists, clean it away with a mild degreaser. Because of its potential for causing this problem, grease should not be used to lubricate the guide rods.

Problem: The machine makes a squeaking noise during exercise.

1. In order to isolate the squeak, lightly spray a silicone-based lubricant one moving part at a time and then exercise on the machine. Start with the trolley track and trolley wheels, then the weight stack guide rods, the pulley, the cable connection points and then the dip bars. When you have isolated the origin of the noise, clean and lubricate that part completely.

2. If the squeak is isolated to the pulley, clean the pulley groove with a standard glass cleaner. If the pulley continues to squeak, replace it. The bearings are sealed, and *are not user-serviceable*.

3. If the machine still squeaks, contact the Customer Service Department of StairMaster® Sports/Medical Products, Inc. for additional assistance.

PARTS REMOVAL AND REPLACEMENT

Safety Panel

1. Remove the six screws on the inside edge of the safety panel.

2. Remove the safety panel from the machine.

3. Do not over tighten the screws when reinstalling the panel.

Chin-up Bar

1. Support the bar at the upwardly curved end with one hand. Use the other hand to push out the detent pin from the other end of the bar. Rocking the bar up and down will ease pin removal.

2. Pull the bar out of the frame.

3. To reinstall the bar, insert it into the hole in the frame. Gently push the bar into the frame until it makes contact. Line up the holes in the bar with the holes in the frame and install the detent pin.

Stub Frame

1. Remove the detent pins. Use finger pressure (or a rubber mallet if needed) to start moving the detent pin out.

2. Pull the stub frame out of the main frame. This will also remove the sweat caps located at the bottom of the machine in front of the vertical frame rails.

3. To reinstall the stub frame, reverse these procedures.

NOTE: Ensure that the sweat cap is properly placed to protect the junction between the vertical frame rail and the stub frame.

Dip Bar

1. Loosen and remove the four screws retaining the window bracket and the bellows to the vertical frame rail.

2. Loosen and remove the allen screw and nut securing the dip bar to the frame.

3. Pull the dip bar out of the frame.

4. To reinstall the dip bar, reverse these procedures.

Dip Bar Bellows

1. Remove the four screws retaining the window bracket and the bellows to the vertical frame rail.

2. Remove the dip bar.

3. Remove the bellows from the dip bar.

4. To reinstall the bellows, reverse these procedures.

Knee Pad

1. Loosen and remove the four bolts and lock washers from the bottom of the knee pad. Lift the knee pad off the trolley.

2. To reinstall the knee pad, align the holes in the knee pad base with the holes in the trolley. Install and tighten the bolts and lock washers.

Trolley Assembly

1. Remove the caps from the top of the trolley tracks.

2. Support the trolley. Loosen and remove the shoulder bolt at the trolley-cable junction.

3. Raise the trolley out of the trolley tracks.

4. Reverse these procedures to reinstall the trolley.

Trolley Wheel Assembly

1. Remove the trolley.

2. Remove the snap ring from the trolley wheel axle.

WARNING

TO REDUCE THE RISK OF EYE INJURY, WEAR EYE PROTECTION WHEN REMOVING SNAP RINGS.

3. Pull the wheel off its axle. Ensure that the wheel bearings spin freely. Replace the wheel if the bearing does not spin freely or if it is worn.

4. Reassemble in the reverse order.

Cable Assembly

1. Support the trolley. Loosen and remove the shoulder bolt at the trolley-cable junction.

2. Lower the trolley to the floor.

3. Loosen and remove the shoulder bolt at the weight stack-cable junction.

4. Support the pulley. Use two wrenches to loosen and remove the pulley mounting bolt.

5. Remove the pulley and the cable.

6. Reverse these procedures to reinstall the cable.

Pulley Assembly

1. Have an assistant support the trolley.

2. Support the pulley. Use two wrenches to loosen and remove the pulley mounting bolt.

3. Remove the pulley.

4. Lower the trolley to the floor.

5. To reinstall the pulley, thread the cable over the pulley groove.

6. Have your assistant lift the trolley.

7. Install the pulley between the two brackets. Insert and tighten the pulley mounting bolt and nyloc nut. DO NOT over tighten the mounting bolt. While your assistant supports the trolley to produce slack in the cable, make sure the pulley spins freely.

Weight Stack Selector Rod

1. Have an assistant support the trolley. Loosen and remove the shoulder bolt at the weight stack-cable junction.

2. Lower the trolley to the floor.

3. Remove the weight stack selector pin.

4. Punch out the roll pin seated in the fifth weight plate from the top of the weight stack.

5. Lift the selector rod out of the weight stack.

6. Reinstall the selector rod by reversing the steps. Ensure the holes in the weight stack plug are lined up with the holes in the weight stack before driving in the weight stack roll pin.

Weight Stack Guide Rod

1. Loosen and remove the nut, bolt and washers at the top of the guide rod.

2. Push the guide rod down so the top of it will clear the mounting bracket.

3. Angle the guide rod slightly and pull it up and out of the weight stack.

WARNING

TO REDUCE THE RISK OF PERSONAL INJURY, NEVER PULL MORE THAN ONE GUIDE ROD OUT OF THE WEIGHT STACK AT ANY GIVEN TIME. REMOVING BOTH GUIDE RODS FROM THE WEIGHT STACK MAY CAUSE THE WEIGHT STACK TO FALL.

4. To reinstall the guide rod, reverse these procedures.

Weight Plate

1. Remove the selector rod.

2. Remove one of the guide rods.

WARNING

TO REDUCE THE RISK OF PERSONAL INJURY, NEVER PULL MORE THAN ONE GUIDE ROD OUT OF THE WEIGHT STACK AT ANY GIVEN TIME. REMOVING BOTH GUIDE RODS FROM THE WEIGHT STACK MAY CAUSE THE WEIGHT STACK TO FALL.

3. Pivot the damaged weight plate out of the stack and put the new weight plate in place. Reinstall the guide rod which was previously removed.

4. Remove the other guide rod and completely remove the damaged weight plate. Pivot the new weight plate into place and reinstall the guide rod.

5. Reinstall the selector rod.

- How to Obtain Troubleshooting Help and Order Parts
- Metric Lift Assistance Matrix
- Figures 5 - 9
- Key to Figures 5 - 9

HOW TO ORDER PARTS

If you need assistance, please have both the serial number of your machine and the date of purchase available when you contact the appropriate StairMaster® Sports/Medical Products, Inc. office listed below.

OFFICES IN THE UNITED STATES

CORPORATE HEADQUARTERS
12421 Willows Road NE, Suite 100
Kirkland, WA 98034
(800) 635-2936 or (206) 823-1825
FAX: (206) 823-9490

CUSTOMER SERVICE
12421 Willows Road NE, Suite 100
Kirkland, WA 98034
(800) 331-3578
FAX: (206) 814-0601
International Customers:
(206) 823-1825

INTERNATIONAL OFFICES AND DISTRIBUTORS

INTERNATIONAL DIVISION
(206) 823-1825
FAX: (206) 820-7505

CANADA: HEADQUARTERS
(800) 668-4857
(416) 798-2670
FAX: (416) 798-2679

EUROPE: HEADQUARTERS
41-92-823801
FAX: 41-92-823802

JAPAN: SENOH CORPORATION
81-03-5479-6711
FAX: 81-03-5479-6703

GERMANY: HEADQUARTERS
49-2204/610-27
FAX: 49-2204/628-90

AUSTRALIA: THE FITNESS GENERATION PTY LTD
61-3/800-2122
FAX: 61-3/800-2722

U.K.: HEADQUARTERS
44-908/221-323
FAX: 44-908/223-162

ITALY: NEW FIT S.R.L.
39-35/31-66-81
FAX: 39-35/31-88-91

FRANCE/BELGIUM/HOLLAND: S.P.R.L. MONDIAL 32-82/226775
FAX: 32-82/226854

SWEDEN/NORWAY: NORDIC GYM PRODUCTION
46-278/242-10
FAX: 46-278/159/66

COUNTRIES NOT LISTED
(918) 831-0100
FAX: (918) 831-0165

METRIC LIFT ASSISTANCE MATRIX

BODY WEIGHT (KG)

LEVEL OF DIFFICULTY

	50	55	60	65	70	75	80	85	90
17	82	84	85	86	87	88	89	89	90
16	73	75	77	79	81	82	83	84	85
15	64	67	70	72	74	76	77	79	80
14	55	59	62	65	68	70	72	73	75
13	46	51	55	58	61	64	66	68	70
12	37	42	47	61	55	58	60	63	65
11	27	34	40	44	48	52	55	57	60
10	18	26	32	37	42	46	49	52	55
9	9	18	24	30	35	40	43	47	50
8		9	17	23	29	33	38	41	45
7			9	16	22	27	32	36	40
6			2	9	16	21	26	31	34
5				2	9	15	21	25	29
4					3	9	15	20	24
3						3	9	15	19
2							4	9	14
1								4	9

NOTE:
It is not possible to perform the exercise at a level of assistance equal or greater than your body weight.

Figure 5: Front View

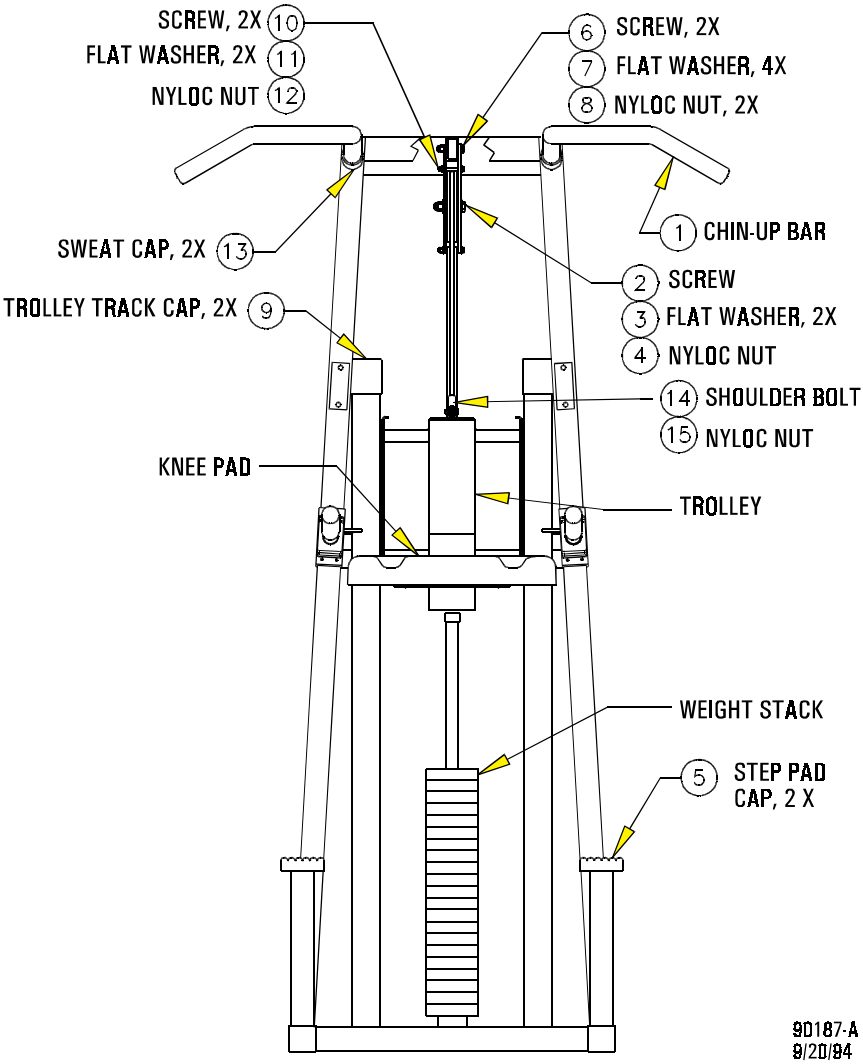

Figure 6: Right Side View

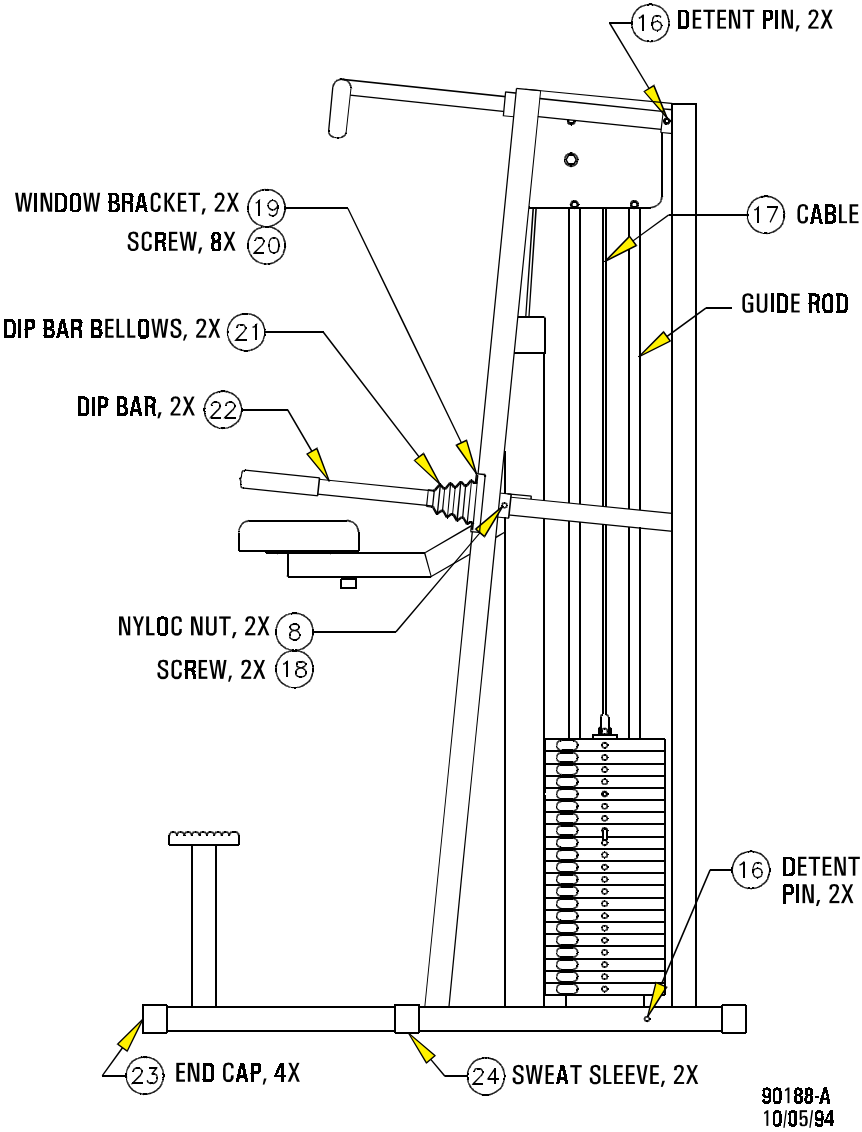

Figure 7: Trolley Assembly

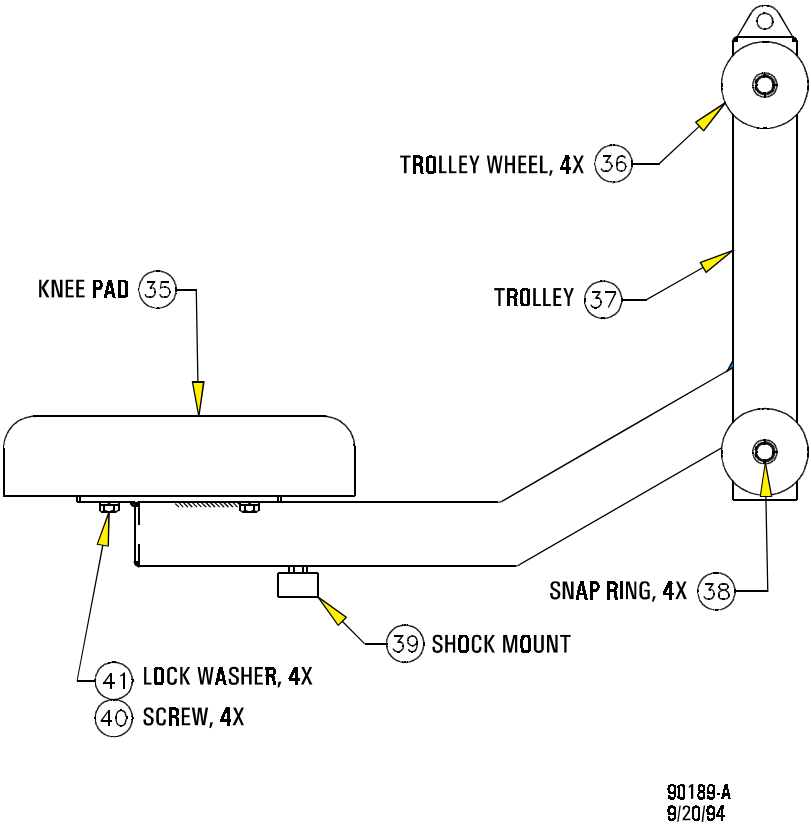

Figure 8: Weight Stack Assembly

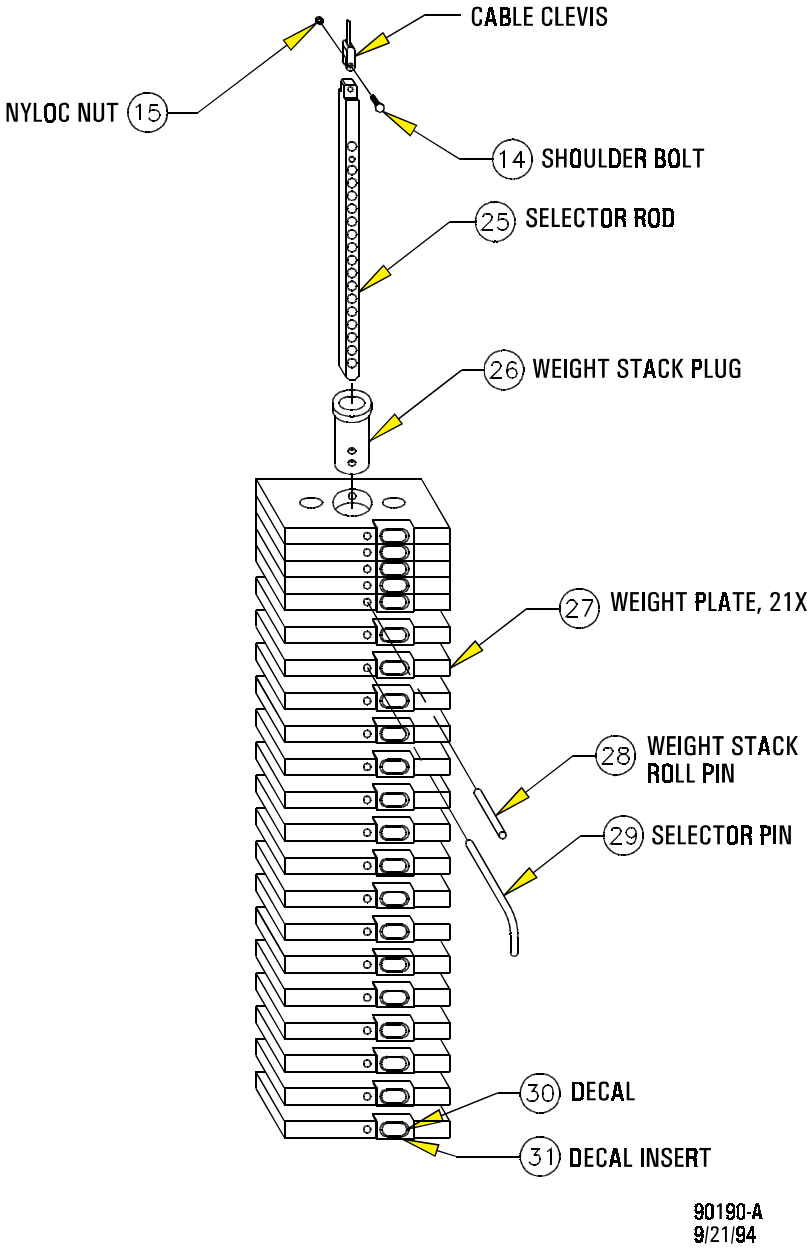

Figure 9: Guide Rod Assembly

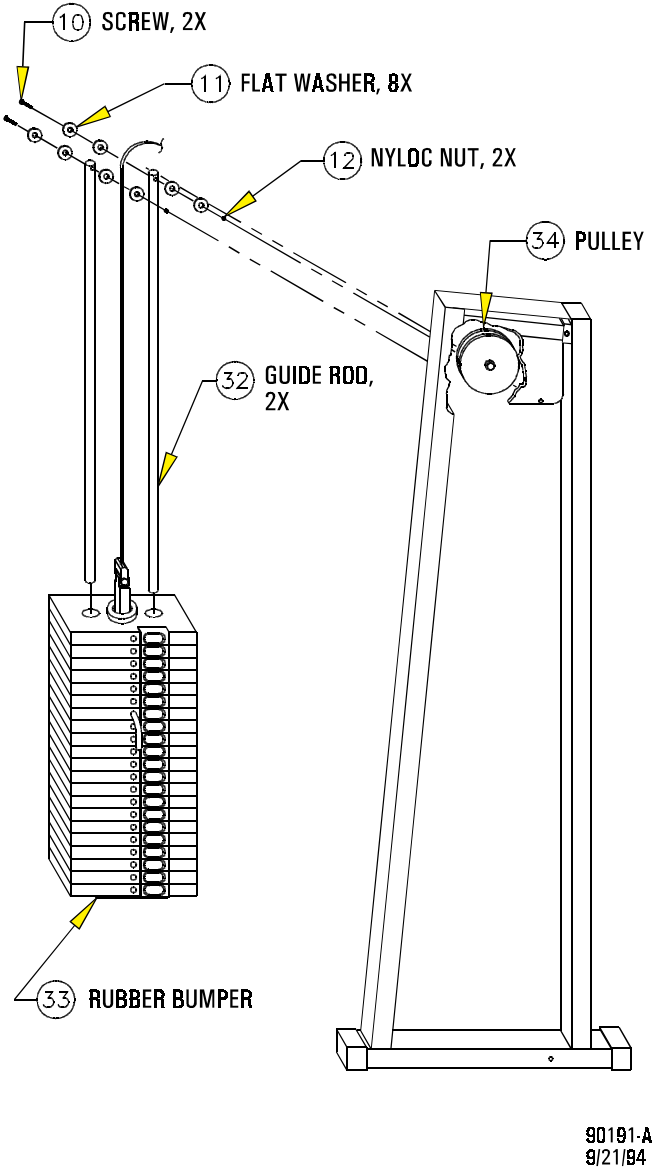

ID Number	Description	Part Number
1	Chin-up bar assembly, right side	40126
	Chin-up bar assembly, left side	40127
2	Screw, hex head 1/2" - 13 x 2-1/2"	23092
3	Flat washer, 1/2"	22046
4	Nyloc nut, 1/2" - 13	22042
5	Step pad cap	20589
6	Screw, hex 3/8" - 16 x 2-1/4"	23159
7	Washer, flat 3/8"	22030
8	Nyloc nut, 3/8" - 16	22029
9	Trolley track cap	23076
10	Screw, hex head 1/4" - 20 x 2-1/4"	23083
11	Flat washer, 1/4"	22038
12	Nyloc nut, 1/4" -20	22036
13	Sweat cap	23062
14	Shoulder bolt	23004
15	Nyloc nut, 5/16"	22032
16	Detent pin, 3/8" x 2-1/8"	20355
17	Cable assembly	23060
18	Screw, socket head 3/8" - 16 x 2-1/2"	23016
19	Window bracket	23422
20	Screw, phillips 8 x 5/8"	22117
21	Dop bar bellows	23005
22	Dip bar assembly	23102-03
23	End cap	21166
24	Sweat sleeve	23050
25	Selector rod	23067
26	Weight stack plug	23065
27	Weight stack plate assembly	23870-03A
28	Roll pin, 7/16" x 2"	23094
29	Weight stack selector pin, forged plates	22997
30	Weight stack decal	23120
31	Decal insert	23911
32	Guide rod	23066
33	Rubber bumper	23069
34	Pulley assembly	23079
35	Knee pad	23021
36	Trolley wheel assembly	23006
37	Trolley	23020
38	Snap ring, .312	23015
39	Shock mount	20188

KEY TO FIGURES

ID Number	Description	Part Number
40	Screw, hex head 5/16" - 18 x 1"	22165
41	Lock washer, 5/16"	22070
	Safety panel assembly, right side	23736
	Safety panel assembly, left side	23737
	Safety panel assembly, rear	237.4
	Fastener, safety panel mounting	22086
	Backboard (upper rear panel), English lang.	22999
	Backboard panel mounting block	20600
	Screw, backboard mounting	22117
	Kit, touch-up paint, flat black	22181